Specifications on this page are subject to change without notice. Every attempt has been made to ensure the accuracy of this drawing; however, Traxxas cannot be held responsible for typographical or other errors.

TRX-4M Body Assembly

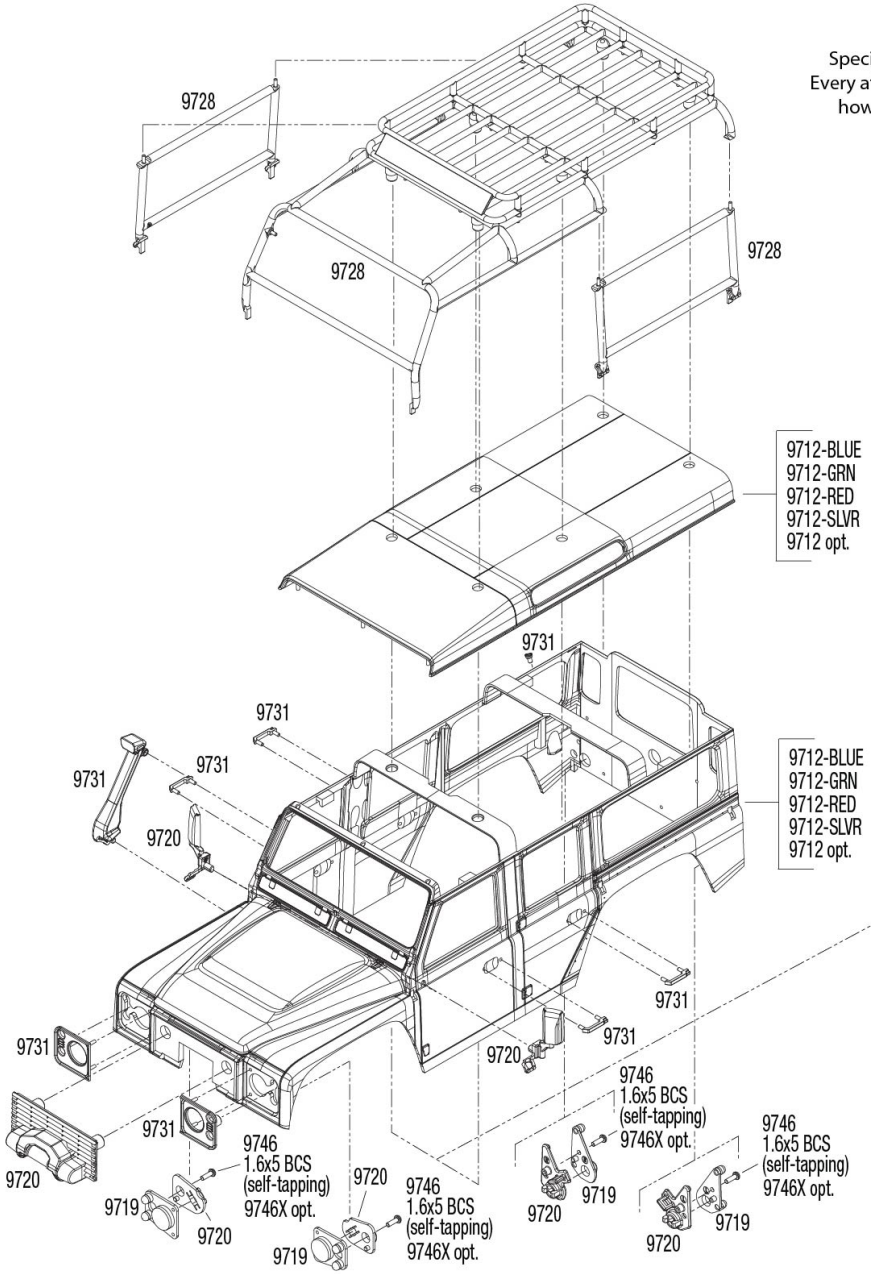

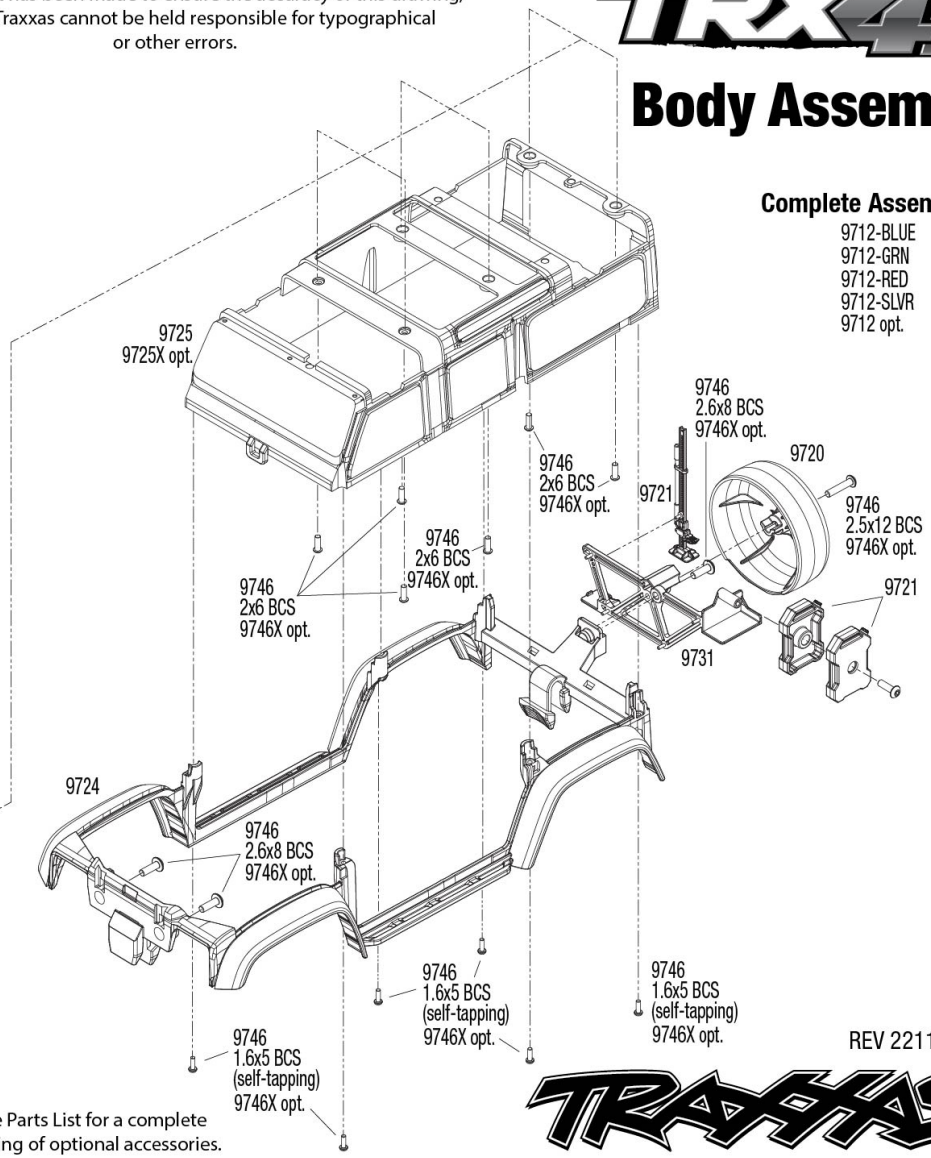

Complete Assembly

9712-BLUE
9712-GRN
9712-RED
9712-SLVR
9712 opt.

See Parts List for a complete listing of optional accessories.

REV 221115-R04

TRX-4M Chassis Assembly

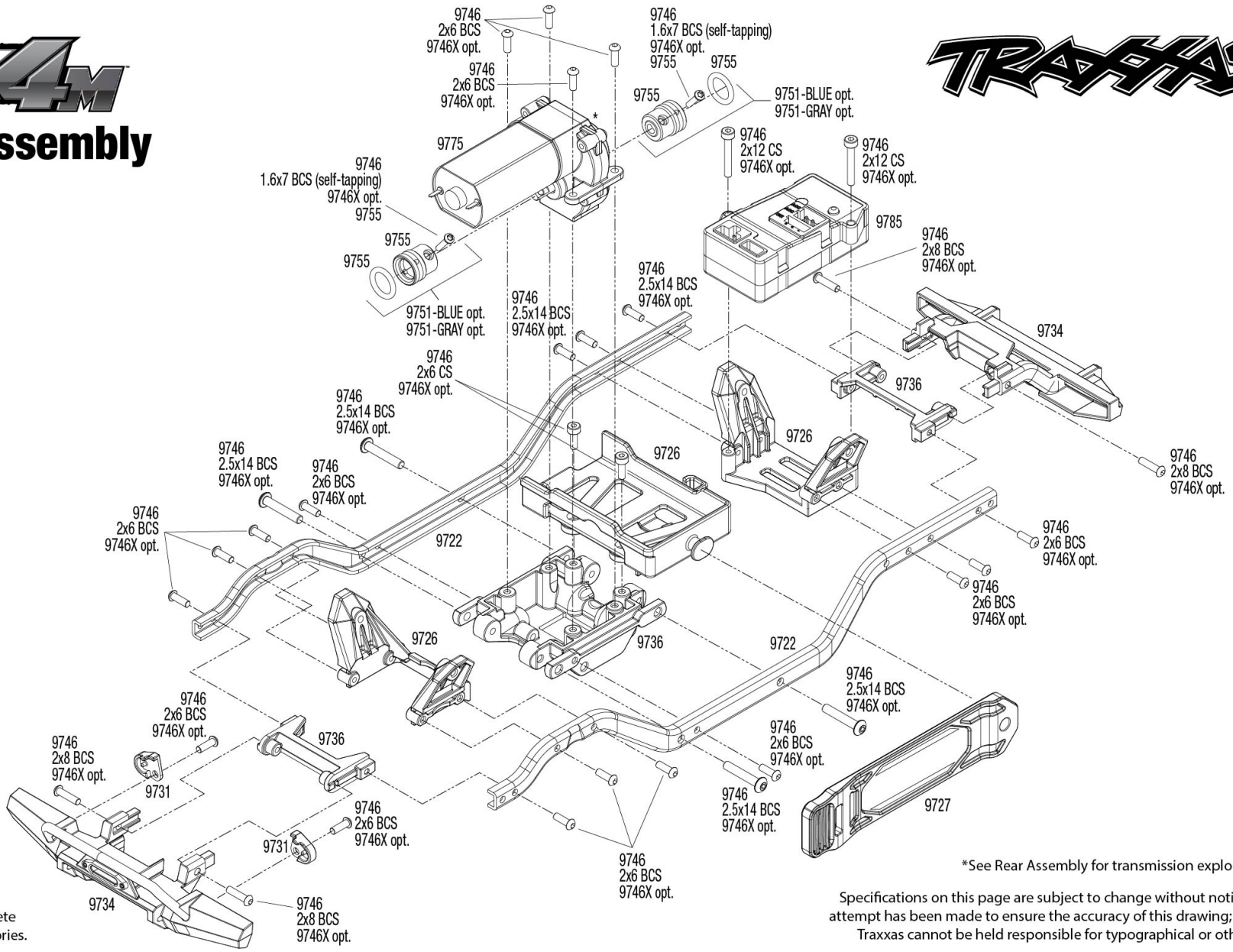

*See Rear Assembly for transmission exploded view.

REV 221115-R04

See Parts List for a complete listing of optional accessories.

Specifications on this page are subject to change without notice. Every attempt has been made to ensure the accuracy of this drawing; however, Traxxas cannot be held responsible for typographical or other errors.

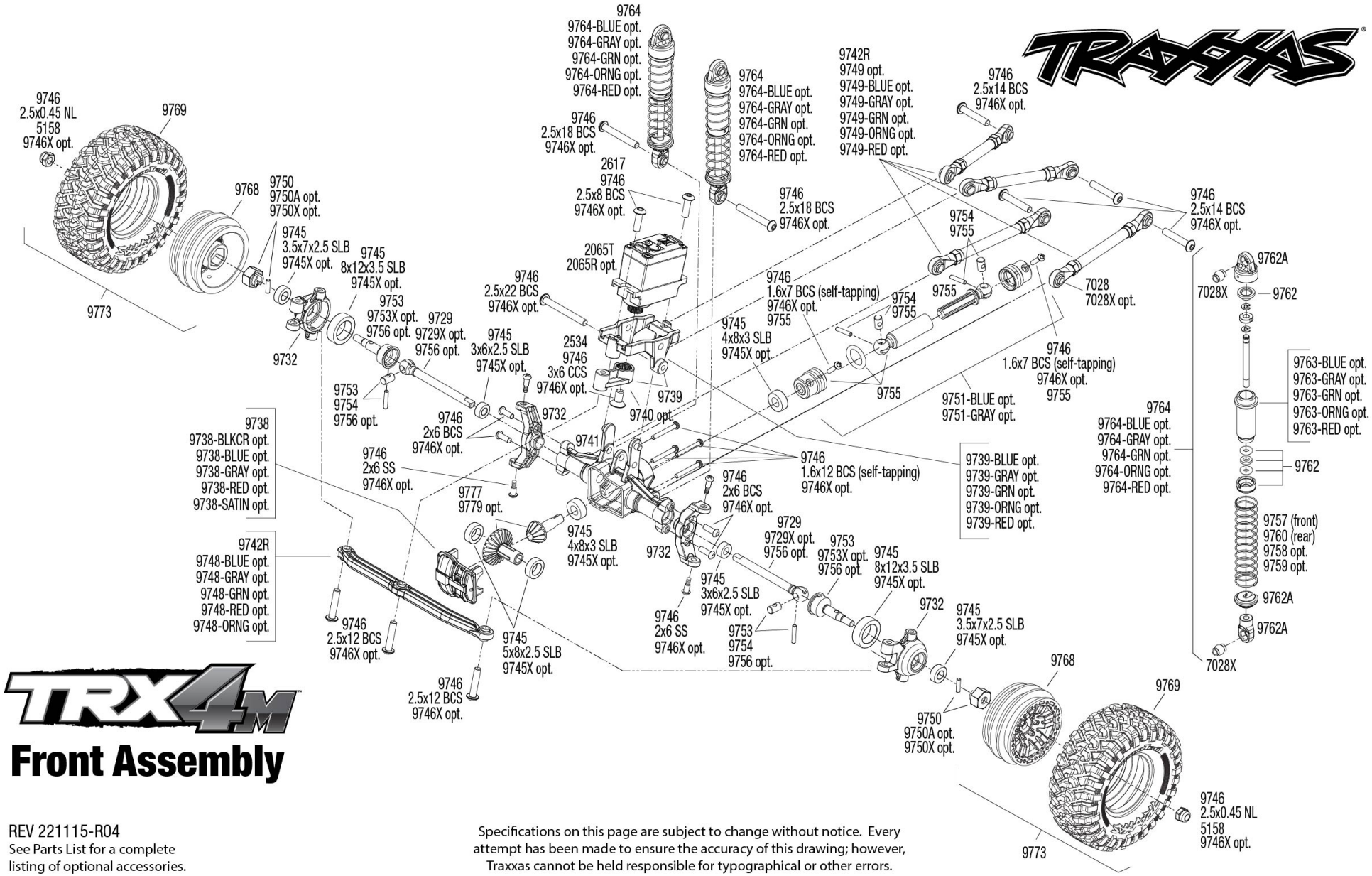

Front Assembly

REV 221115-R04

See Parts List for a complete listing of optional accessories.

Specifications on this page are subject to change without notice. Every attempt has been made to ensure the accuracy of this drawing; however, Traxxas cannot be held responsible for typographical or other errors.

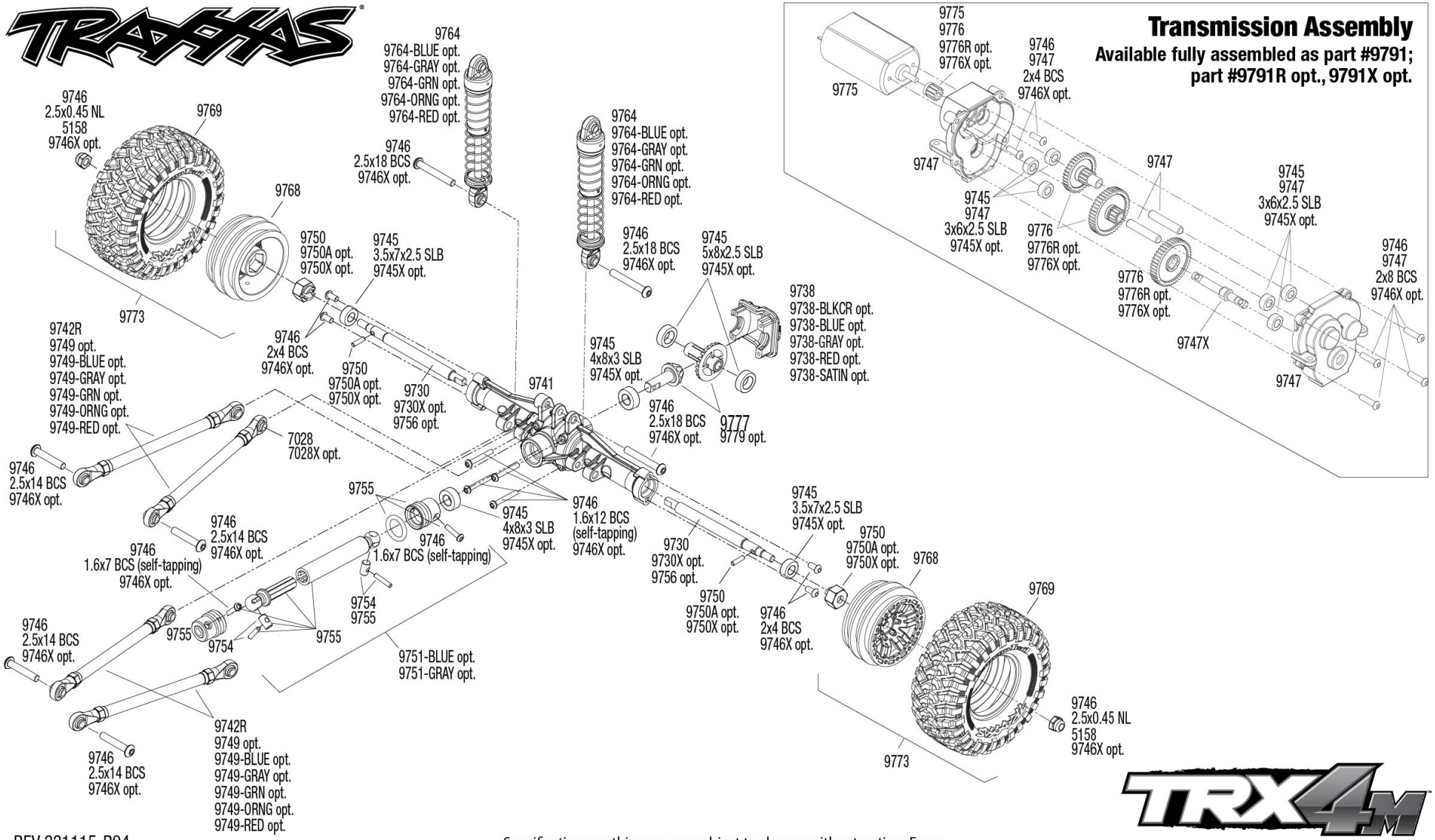

REV 221115-R04

See Parts List for a complete listing of optional accessories.

Specifications on this page are subject to change without notice. Every attempt has been made to ensure the accuracy of this drawing; however, Traxxas cannot be held responsible for typographical or other errors.

Rear Assembly