BANDIT®

Chassis Assembly

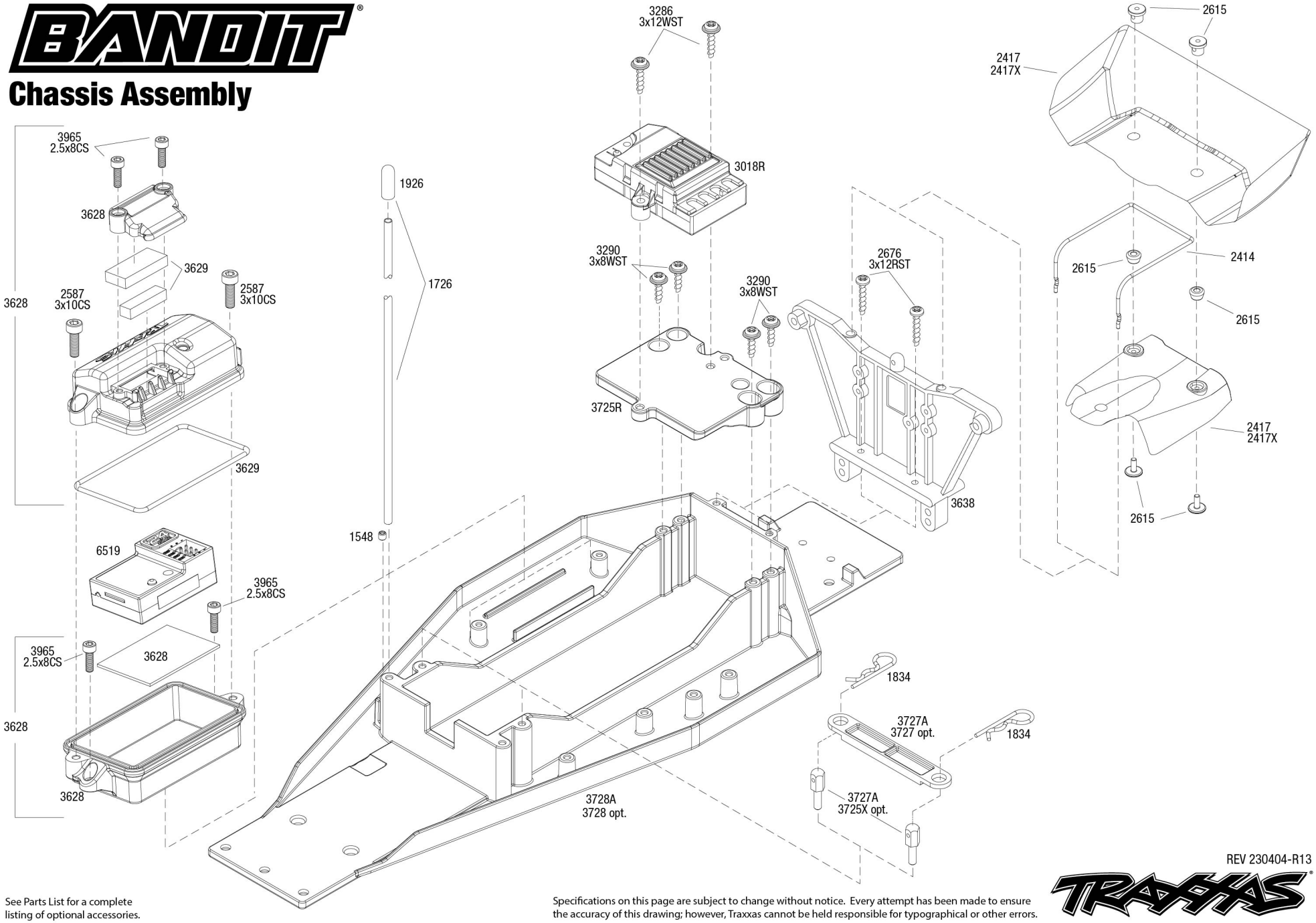

REV 230404-R13

See Parts List for a complete listing of optional accessories.

Specifications on this page are subject to change without notice. Every attempt has been made to ensure the accuracy of this drawing; however, Traxxas cannot be held responsible for typographical or other errors.

TRAXXAS®

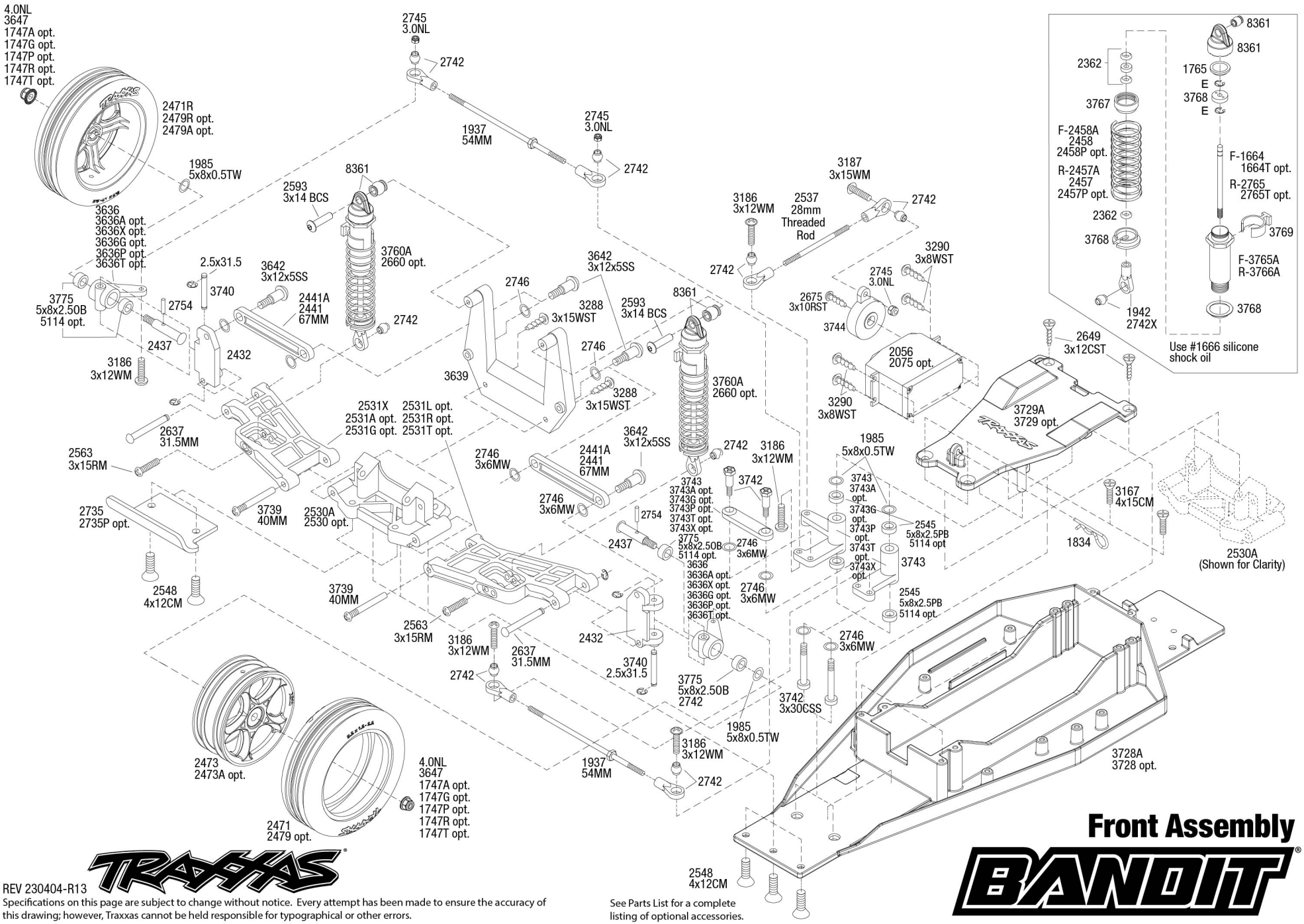

Front Assembly

REV 230404-R13

Specifications on this page are subject to change without notice. Every attempt has been made to ensure the accuracy of this drawing; however, Traxxas cannot be held responsible for typographical or other errors.

See Parts List for a complete listing of optional accessories.

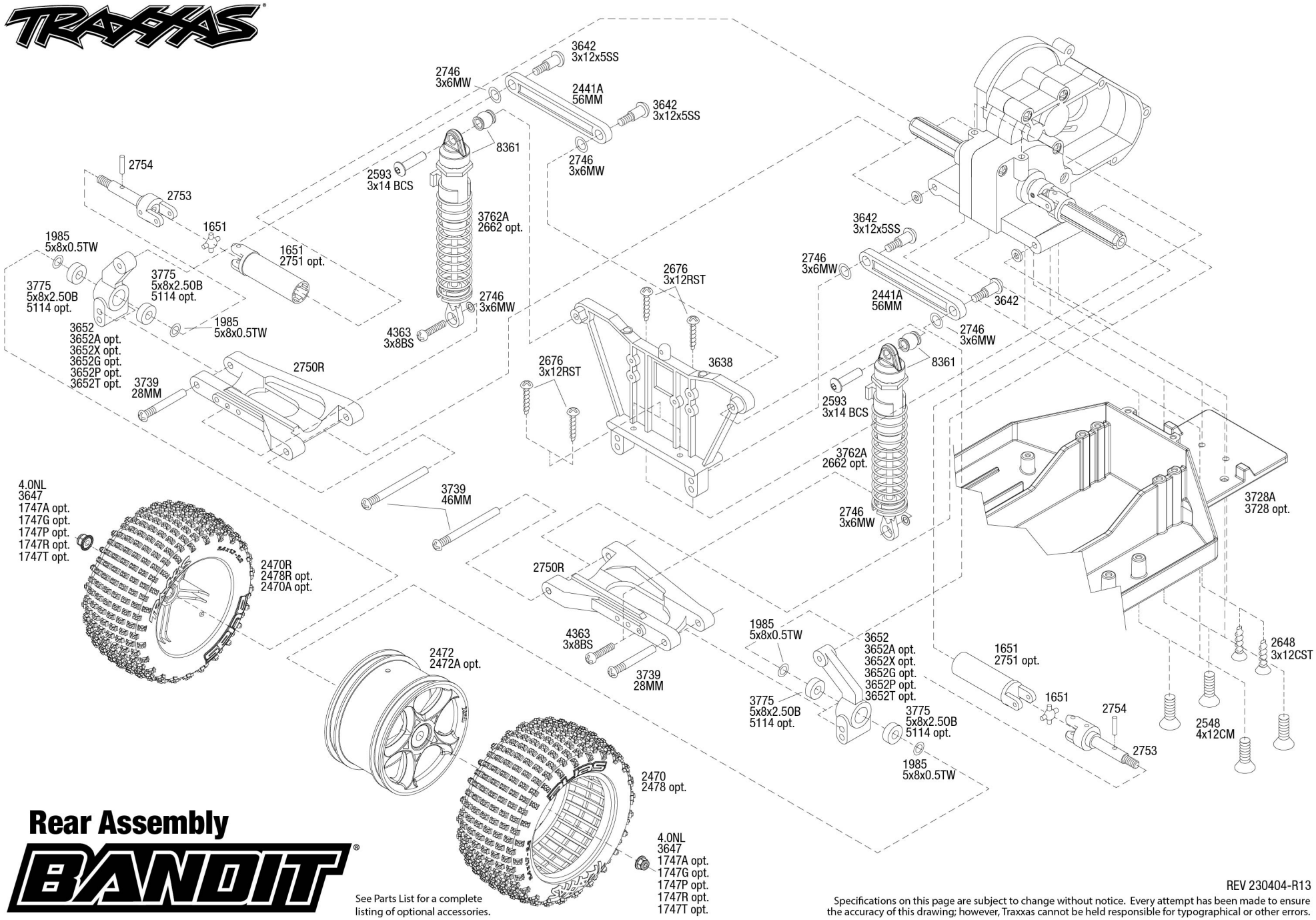

Rear Assembly

BANDIT

See Parts List for a complete listing of optional accessories.

REV 230404-R13

Specifications on this page are subject to change without notice. Every attempt has been made to ensure the accuracy of this drawing; however, Traxxas cannot be held responsible for typographical or other errors.

BANDIT®

Transmission Assembly

Available fully assembled as part #3695

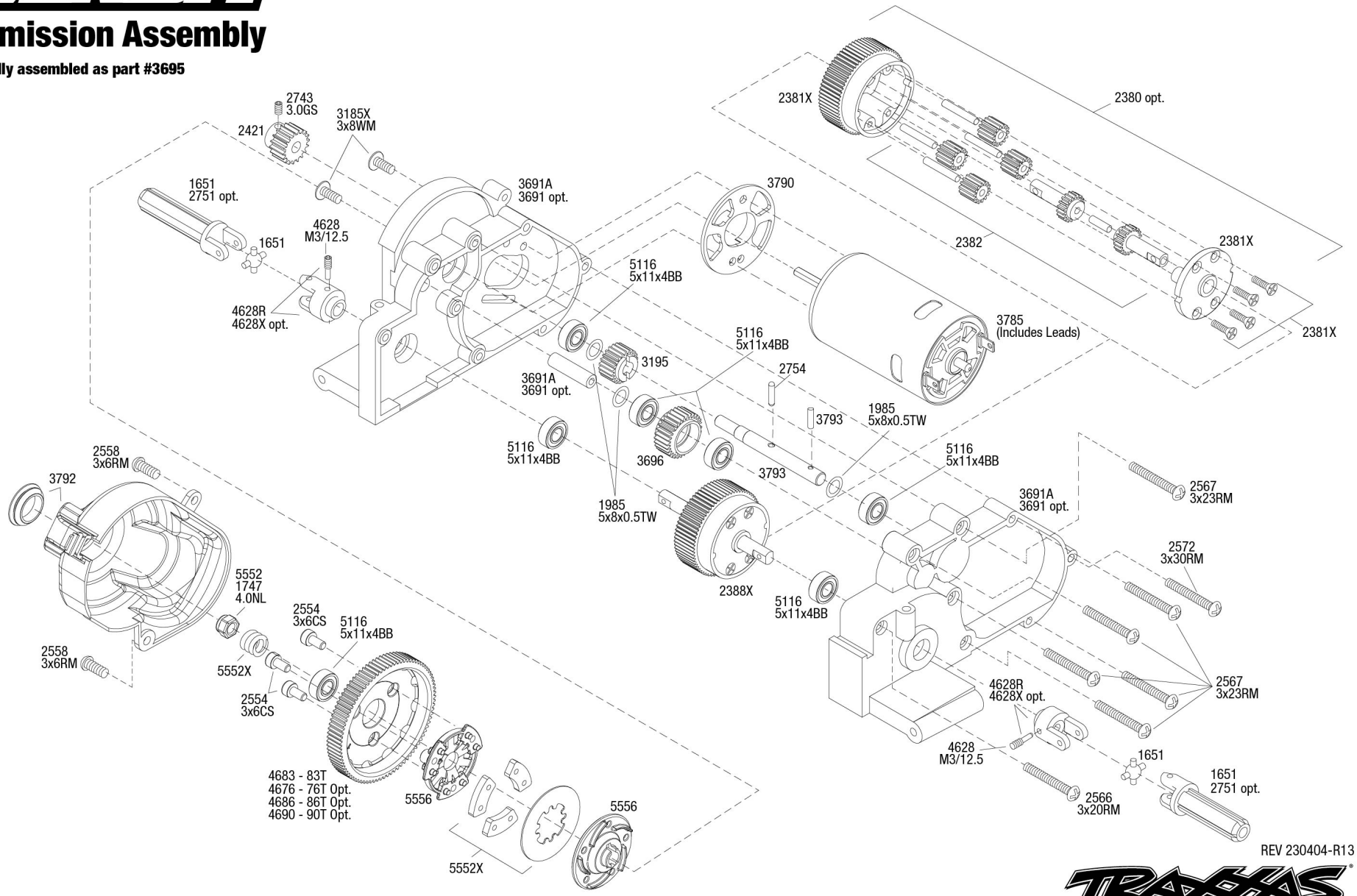

REV 230404-R13

TRAXXAS®

See Parts List for a complete listing of optional accessories.

Specifications on this page are subject to change without notice. Every attempt has been made to ensure the accuracy of this drawing; however, Traxxas cannot be held responsible for typographical or other errors.